PWL15-20E-Q2



TCM LiTE Range, optimal specification for day to day operation, without compromising engineering excellence, long-term performance and outstanding reliability.

EASY TO USE, SIMPLE TO MAINTAIN.

TCM PWL15-20E-Q2 with **compact** design, **robust** steel chassis frame and 1500 kg and 2000 kg capacity, is built to handle applications with strength and reliability, reducing downtime and extending service life.

Ergonomic tiller head with creep button, simplifies operation in tight spaces, ensuring operators work comfortably and efficiently throughout the day. A small turning radius, enables **safe and confident manoeuvrability** in confined spaces, reducing the risk of accidents. The fork tips marked at 800mm combined with side castor wheels ensure easy and accurate pallet entry.

The high capacity, high power **Li-ION batteries** are long-lasting with low operating costs and minimal upkeep and no water filling required. **Fast battery change** and charging maintains productivity with minimal interruptions, reducing downtime. Conveniently placed external diagnostics port speeds up servicing and fault resolution.



PWL15-20E-Q2

STANDARD SPECIFICATIONS PRELIMINARY

CHARACTERISTICS					
1.1	Manufacturer			TCM	
1.2	Manufacturer's model designation			**PWL15E-Q2**	**PWL20E-Q2**
1.3	Power source			Battery	Battery
1.4	Operator type			Pedestrian	Pedestrian
1.5	Load capacity	Q	kg	1500	2000
1.6	Load center distance	c	(mm)	600	600
1.8	Load wheel axle to fork face (forks lowered)	x	(mm)	947	947
1.9	Wheelbase	y	(mm)	1189	1189
WEIGHT					
2.1b	Truck weight without load, with maximum battery weight		kg	125	133
2.2	Axle loadings with nominal load & maximum battery weight, drive / load side		kg	610 / 1015	650/1483
2.3	Truck weight without load, with maximum battery weight		kg	95 / 30	100 / 33
WHEELS, DRIVE TRAIN					
3.1	Tyres: PT = Power Thane, Vul = Vulkollan, P = Polyurethane, N = Nylon, R = Rubber drive / load side			P / P	P / P
3.2	Tyre dimensions, drive side		(mm)	210 x 75	210 x 75
3.3	Tyre dimensions, load side		(mm)	74x93 single 80x70 tandem	74x93 single 80x70 tandem
3.4	Castor wheel dimensions (diameter x width)		(mm)	80 x 30	80 x 30
3.5	Number of wheels, load / drive side (x = driven)			1x +2/2 (4)	1x +2/2 (4)
3.6	Track width (center of tyres), drive side	b10	(mm)	- / 430	- / 430
3.7	Track width (center of tyres), load side	b11	(mm)	380 / 525	380 / 525
DIMENSIONS					
4.4	Lift height	h3	(mm)	115	115
4.9	Height of tiller arm / steering console (min./max.)	h14	(mm)	715 / 1125	715 / 1125
4.15	Fork height, fully lowered	h13	(mm)	75	75
4.19	Overall length	l1	(mm)	1538	1538
4.2	Length to fork face	l2	(mm)	388	388
4.21	Overall width	b1/b2	(mm)	540 / 685	540 / 685
4.22	Fork dimensions (thickness, width, length)	s /e / l	(mm)	50 / 160 / 1150	50 / 160 / 1150
4.22	Outside width over forks (minimum / maximum)	b5	(mm)	540 / 685	540 / 685
4.32	Ground clearance at center of wheelbase, (forks lowered)	m2	(mm)	25	25
4.34a	Working aisle width (Ast) with 800 x 1200 mm pallets, load lengthwise	Ast	(mm)	2013	2013
4.35	Turning radius	Wa	(mm)	1340	1340
PERFORMANCE					
5.1	Travel speed, with / without load		km / h	4.4 / 4.9	4.9 / 4.9
5.2	Lifting speed, with / without load		m / s	0.015 / 0.022	0.016 / 0.019
5.3	Lowering speed, with / without load		m / s	0.05 / 0.04	0.052 / 0.023
5.8	Maximum gradeability with / without load		%	6 / 16	7 / 16
5.10	Service brakes (mechanical / hydraulic / electric / pneumatic)			Electromagnetic	Electromagnetic
ELECTRIC MOTORS					
6.1	Drive motor capacity (60 min. short duty)		kW	0.75	1
6.2	Lift motor output at 15% duty factor		kW	0.5	0.8
6.3	Battery to DIN			no	no
6.4	Battery voltage/capacity at 5-hour discharge		V / Ah	24 / 20	48 / 20
6.5	Battery weight		kg	5.8	8.1
6.6a	Energy consumption according to EN16796		kWh / h	0.17	0.25
MISCELLANEOUS					
8.1	Type of drive control			DC	DC
10.7	Level of noise at the ear level of the driver according to EN 12 053:2001 and EN ISO 4871, in work LpAZ		dB (A)	<70	<70

OPTIONS
Fork size 685 x 1220 mm - adaptable to different pallet types
24V/40Ah Lithium-Ion battery upgrade - longer run time for extended shifts
24V/12Ah Charger upgrade - faster charging for higher capacity batteries
Side castor wheels - for improved tall load stability
Double load rollers - for improved handling of heavier loads
Weighing scale - with or without printer - PWL20E-Q2 only

DIMENSIONS
PWL15-20E-Q2

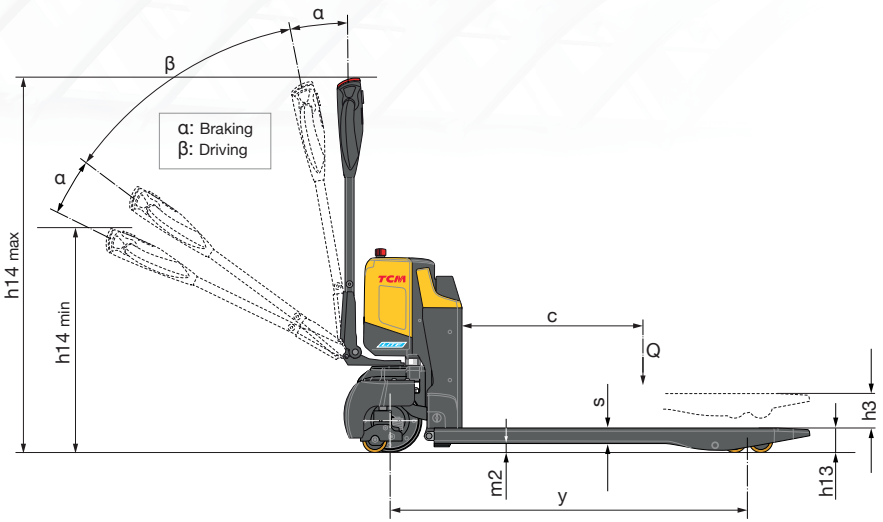

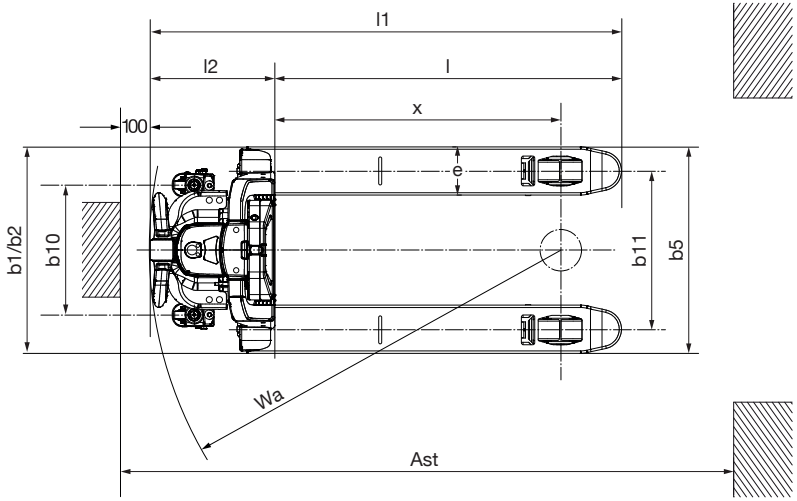

tcm.eu

© 2026 Logisnext Europe B.V. All rights reserved. Specifications are indicative and may vary depending on operating conditions. Failure to assess all factors may result in performance deviations. All relevant sales support materials and technical expertise of the official distributor must be considered when identifying the best product/solution. Options and technical details may change without notice. See full legal notices and up-to-date product information at www.tcm.eu WEST2570-1026